SPECIFICATION:

JOSAM 17560 SERIES FLOOR MOUNTED SINGLE CARRIER WITH BEARING PLATES, ADJUSTABLE SUPPORTING RODS, STRUCTURAL UPRIGHTS AND WELDED FEET.

LAVATORY CARRIER

FLOOR-MOUNT BEARING PLATE

SERIES **17560-M1541**

NOTES:
1. HARDWARE SUPPLIED NOT SHOWN.
2. FOR SKYTRON / JAMESTOWN FS2121-J AND SS2121-J 1 BAY SINK.
3. RECOMMEND FEET TO BE SECURED TO FLOOR WITH 1/2" BOLTS AND ANCHORS BY OTHERS.

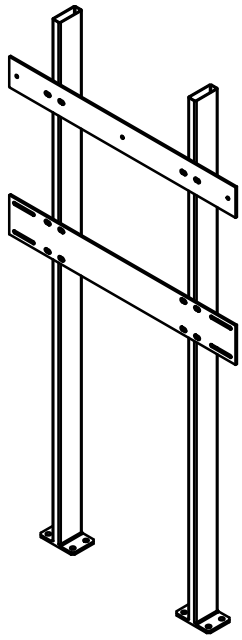

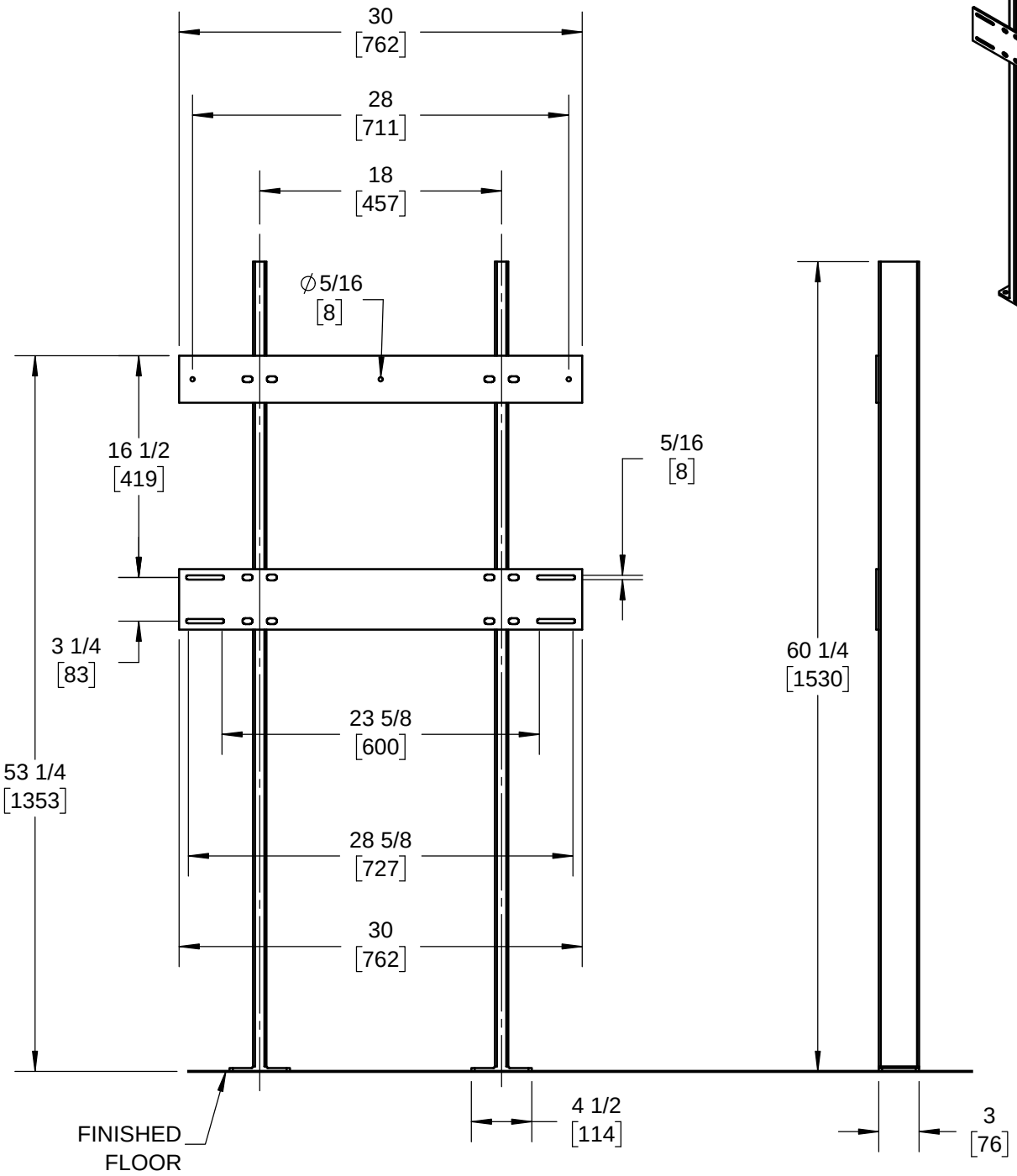

WARNING: Cancer and Reproductive Harm - www.P65Warnings.ca.gov

DATE OF LAST CHANGE: 12/23/19

DIMENSIONS ARE SUBJECT TO MANUFACTURERS TOLERANCES AND CHANGE WITHOUT NOTICE. WE CAN ASSUME NO RESPONSIBILITY FOR USE OF SUPERSEDED OR VOID DATA.

JOSAM

MICHIGAN CITY, INDIANA

NOTES